ITEM No.	
REF.	

OPERATIONS

DISTRIBUTE COPIES TO

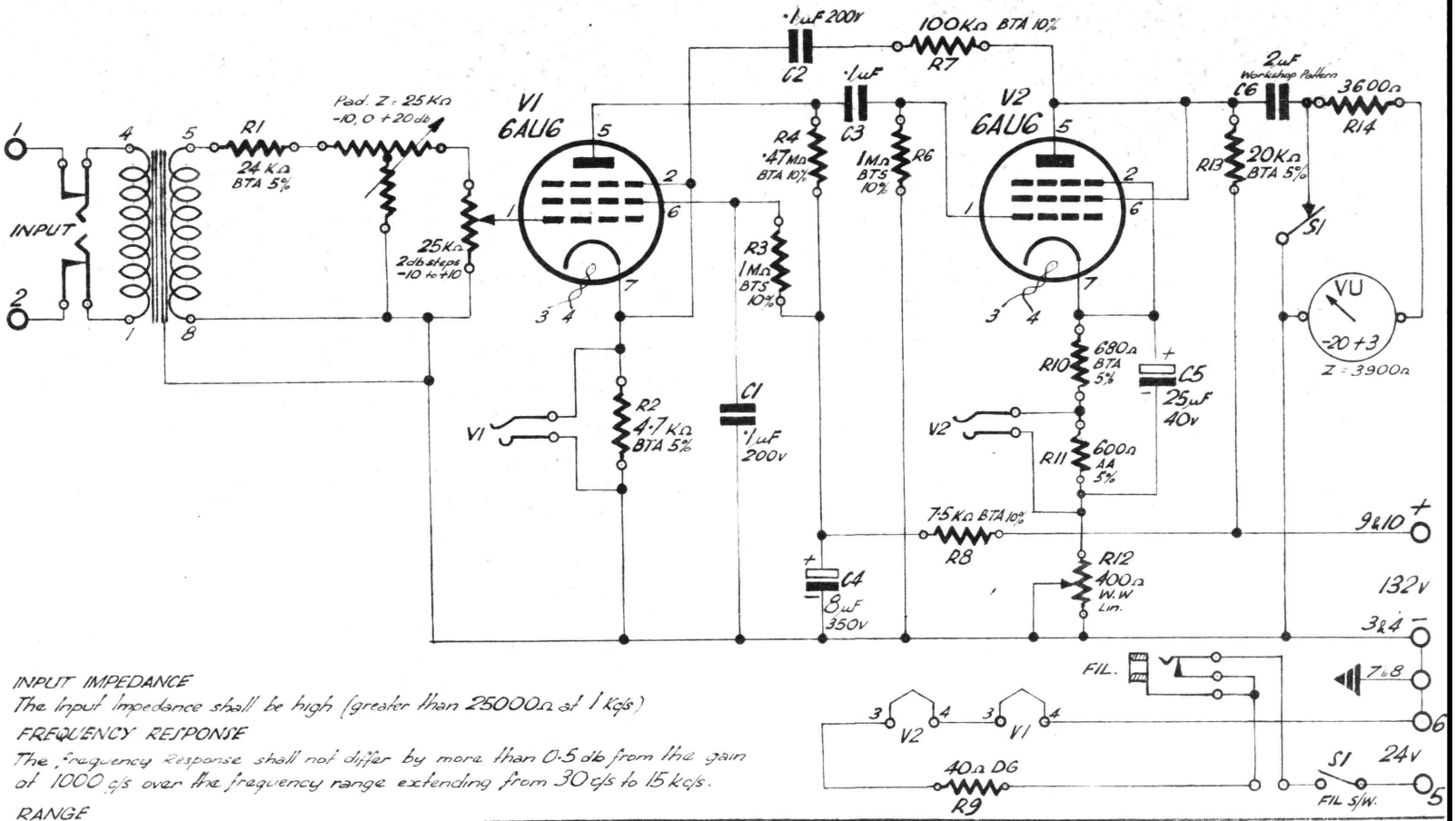

INPUT IMPEDANCE

The Input Impedance shall be high (greater than 25000 Ω at 1 Kc/s)

FREQUENCY RESPONSE

The frequency response shall not differ by more than 0·5 db from the gain of 1000 c/s over the frequency range extending from 30 c/s to 15 kc/s.

RANGE

The operating range shall be 73 v.u. and shall range from −40 v.u. to +33 v.u.

ACCURACY

The maximum error at any setting of the attenuator shall not exceed ±0·2db when measured at 1000 c/s.

ISSUE	CHANGE
1	ORIGINAL

CHANGES

MATERIAL		DRAWN	
QUALITY		TRACED	
STOCK SIZE		CHECKED	MECH. / ELECT.
WEIGHT, 1,000			
LENGTH, 1,000		PASSED	
SHEETS, 1,000		APPROVED	
ITEM FINISH		DATE	

TRANSMISSION PRODUCTS PTY. LTD.
COMMUNICATION ENGINEERS
DENISON STREET, NORTH SYDNEY, AUSTRALIA

SCHEMATIC VOLUME INDICATOR

USED ON PHYSICAL PROGRAMME EQUIP.

THIRD ANGLE PROJECTION — DO NOT SCALE DRAWING — REPORT ERRORS

SCALE: — UNLESS SPECIFIED TOLERANCE ON FRACTIONS IS: — " " DECIMALS IS: —

DRAWING NUMBER M09·147·1